Schematic „Family tree“
of the heat resistant stainless steels

DEUTSCHE EDELSTAHLWERKE
Providing special steel solutions

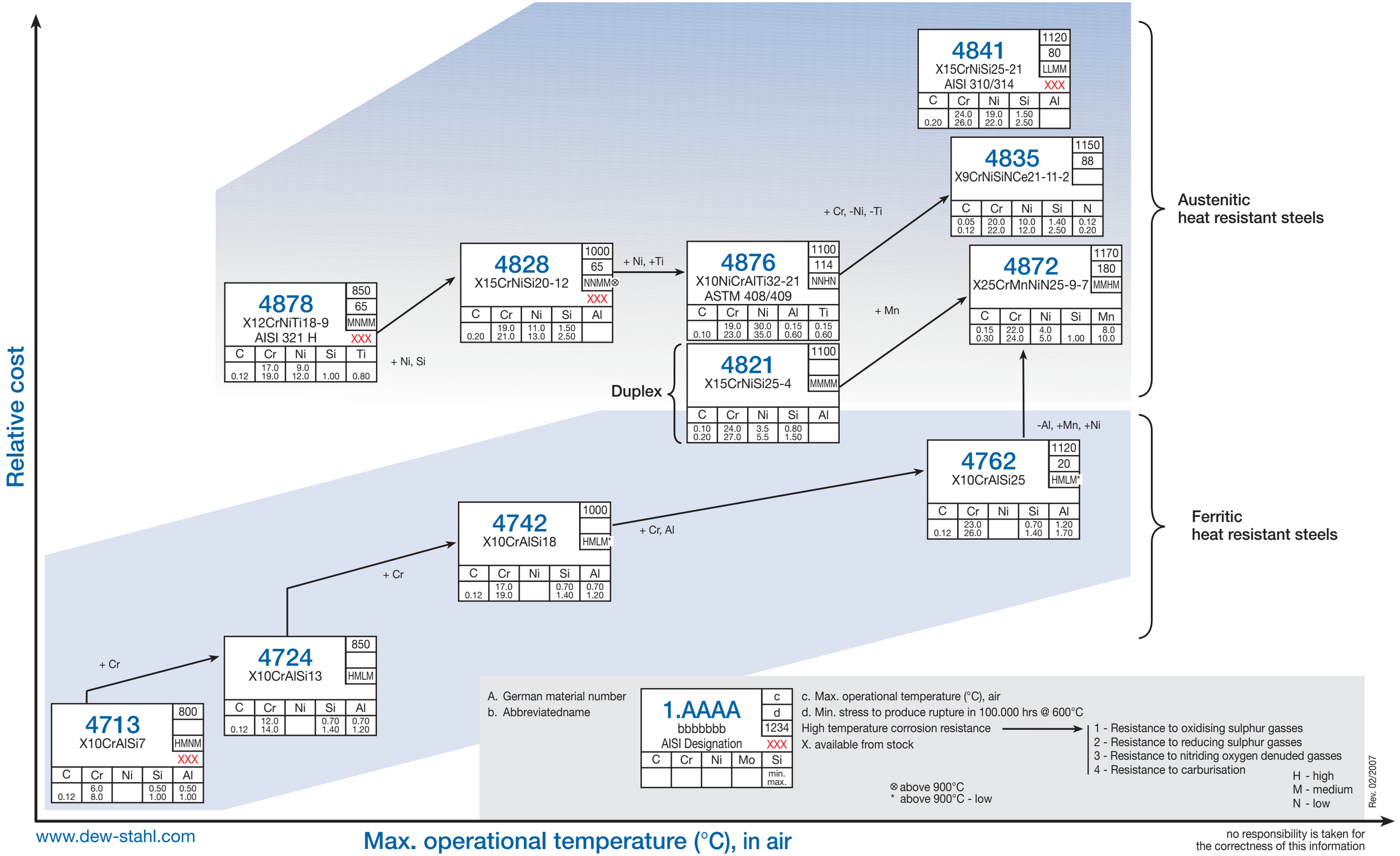

www.dew-stahl.com

no responsibility is taken for
the correctness of this information